CALCULATIONS

Wind load		
Category:	I	
Exposure:	C	
V (mph)	115	
LF-load factor ASD	0.6	
kd:	0.85	
h(ft):	8	
Kh	0.575	
Pd(psf	9.928	

Fence Material Properties			
Steel			
Fy=	46	ksi	
Fb=	27.6	ksi	
Material used			
	dim	Sx	Sy
Post=	2.5" diam	2.78	
Horizontal=	2"x1"15 ga		0.5502
Paintgrid=	26GA	0.72	

Post Design		
Mmax= WL^2/2	1270.8188	ft-lb
	15249.826	in-lb
Sreq=	0.5525299	in^3

Paintgrid		
P=	158.85235	
Mmax=Pl/8	69.497904	ft-lb
	833.97485	in-lb
Sreq=	0.0302165	in^3

Top & Bot horizontal beam		
P=	121.62133	
Mmax=Pl/8	53.209333	ft-lb
	638.51199	in-lb
Sreq=	0.0231345	in^3

Screws			
Tension/4=	1906.23	lb/screw	
Shear total	121.62		
1/4" tapcon 1-3/4" min embedment			
Tension	2,200	lb	ok
Shear total	1,670	lb	ok

Post to Plate Connection			
M=	15249.826	in-lb	
Tension = M/2"	7624.9129	lb	7.6 kip
Shear=	121.62	lb	

Shear at Plate		
Plate Section	4"X1/4"	
Area	1	sqin
Fy=	46	ksi
Palte capacity=Fy(area)	46	kip
Applied shear=	7.6	kip OK

00200 BUILDING CODES

FLORIDA BUILDING CODE - 2023 8th EDITION

00500 STRUCTURAL LOADING:

THE STRUCTURE HAS BEEN DESIGNED IN ACCORD WITH THE 2023 FLORIDA BUILDING CODE AND / OR MORE RESTRICTIVE REQUIREMENTS FOR LOADS AS GIVEN BELOW UNLESS SPECIFICALLY CALL FOR DIFFERENT LOADING CRITERIA. REFER TO DRAWINGS FOR LOAD SCHEDULE.

WIND LOAD PER ASCE 7-22:
V=115 MPH FOR FENCES UP TO 6'-0"

FOUNDATIONS:

* PERFORMED: WE OBSERVED A SANDY SOIL WITH LIMESTONE FRAGMENTS. AS PER FBC 2023; TABLE 1806.2; SECTION 1806.3.4 WE ASSUME A MAXIMUM OF 200 PSF LATERAL SOIL BEARING PRESSURE CAPACITY (WILL BE INCREASED BY 2)

03300 CAST-IN-PLACE CONCRETE: ACI 318-11

ALL CONCRETE TO HAVE 28 DAY COMPRESSIVE STRENGTHS AS F'C = 3,000 PSI

05120 STRUCTURAL STEEL: AISC 13TH EDITION

PER LATEST EDITION OF THE AMERICAN INSTITUTE OF STEEL CONSTRUCTION (AISC) "SPECIFICATIONS FOR THE DESIGN, TO CONFORM TO:

SHAPES & PLATES	ASTM A 500 GRADE C FY=36 KSI; FB=23.76 KSI
TUBES	ASTM A 500 GRADE B

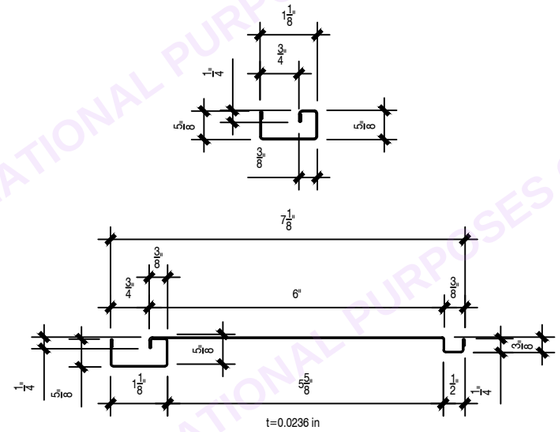

ecPanel DIMENSIONS
NTS

MINIMUM FENCE FRAME FOR V=115 MPH				
WIND EXPOSURE	POST SIZE HSS	SLAT THICKNESS (INCH)	FOUNDATION SIZE	HORIZ STRUT HSS
"C"	2 1/2 x2 1/2 x0.0713	0.0236	12"Øx2'-6" DEPTH	2x1x0.0713
STRESS CAP: Fb=30.36 ksi				

FENCE HEIGHT UP TO 6'-0"

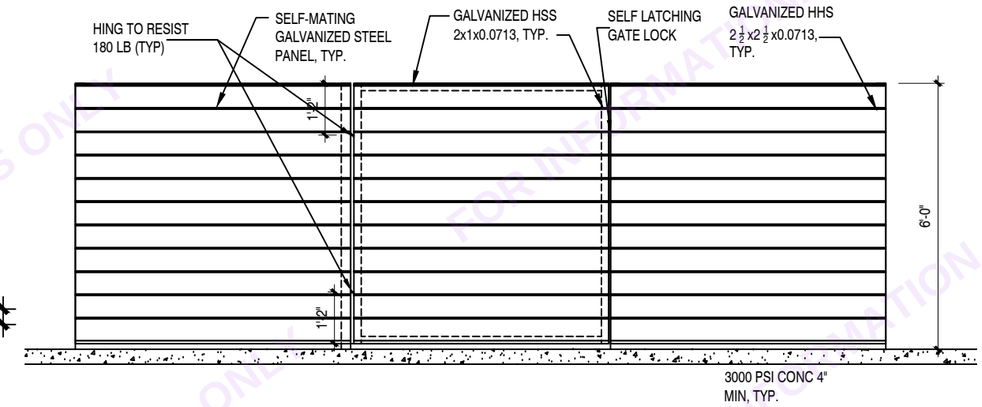

ELEVATION

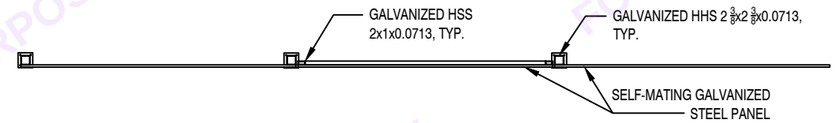

SECTION

TYPICAL FENCE W/ GATE 2
NTS

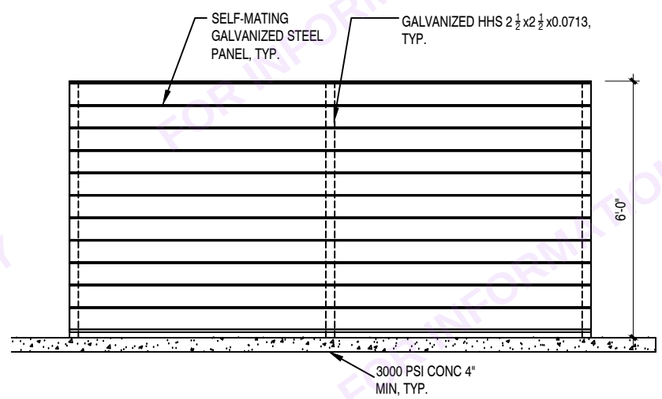

ELEVATION

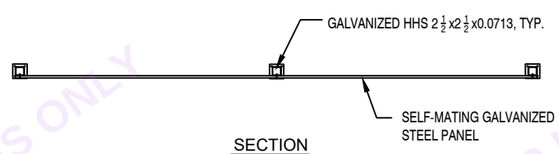

SECTION

TYPICAL FENCE 1
NTS

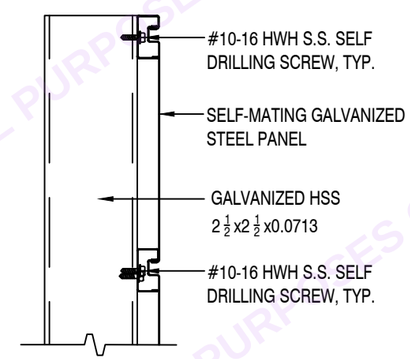

CONNECTION DETAIL 4
NTS

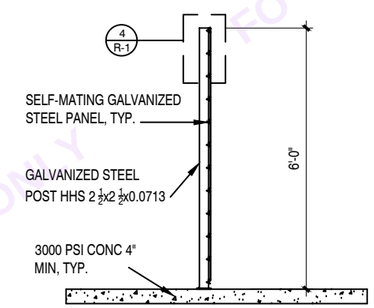

TYPICAL FENCE SECTION 3
NTS

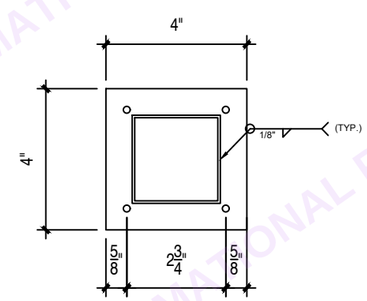

TYPICAL PLATE SECTION 5
NTS

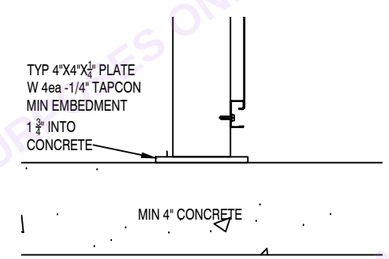

TYPICAL PLATE SECTION 5
NTS

REVISIONS		
No	DATE	BY

PROJECT NAME: METAL FENCE
MANUFACTURER: ecFENCE SYSTEMS
ADDRESS: FOR USE IN THE HVHZ FLORIDA BUILDING CODE 2023

Date	
Scale	NOTED
Drawn	
Job	EC FENCE
Sheet	S-1

1 OF 1

FOR INFORMATIONAL PURPOSES ONLY